Robot Modularity in China

—Road to the Modularity

3/12/2015

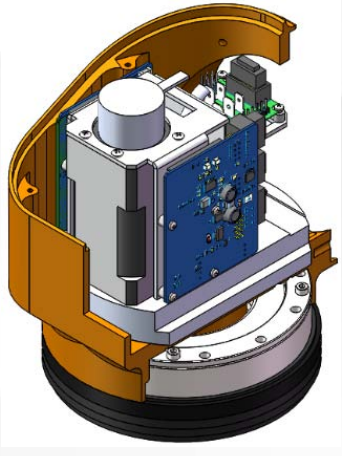

Standard Architecture for Robot Modularity

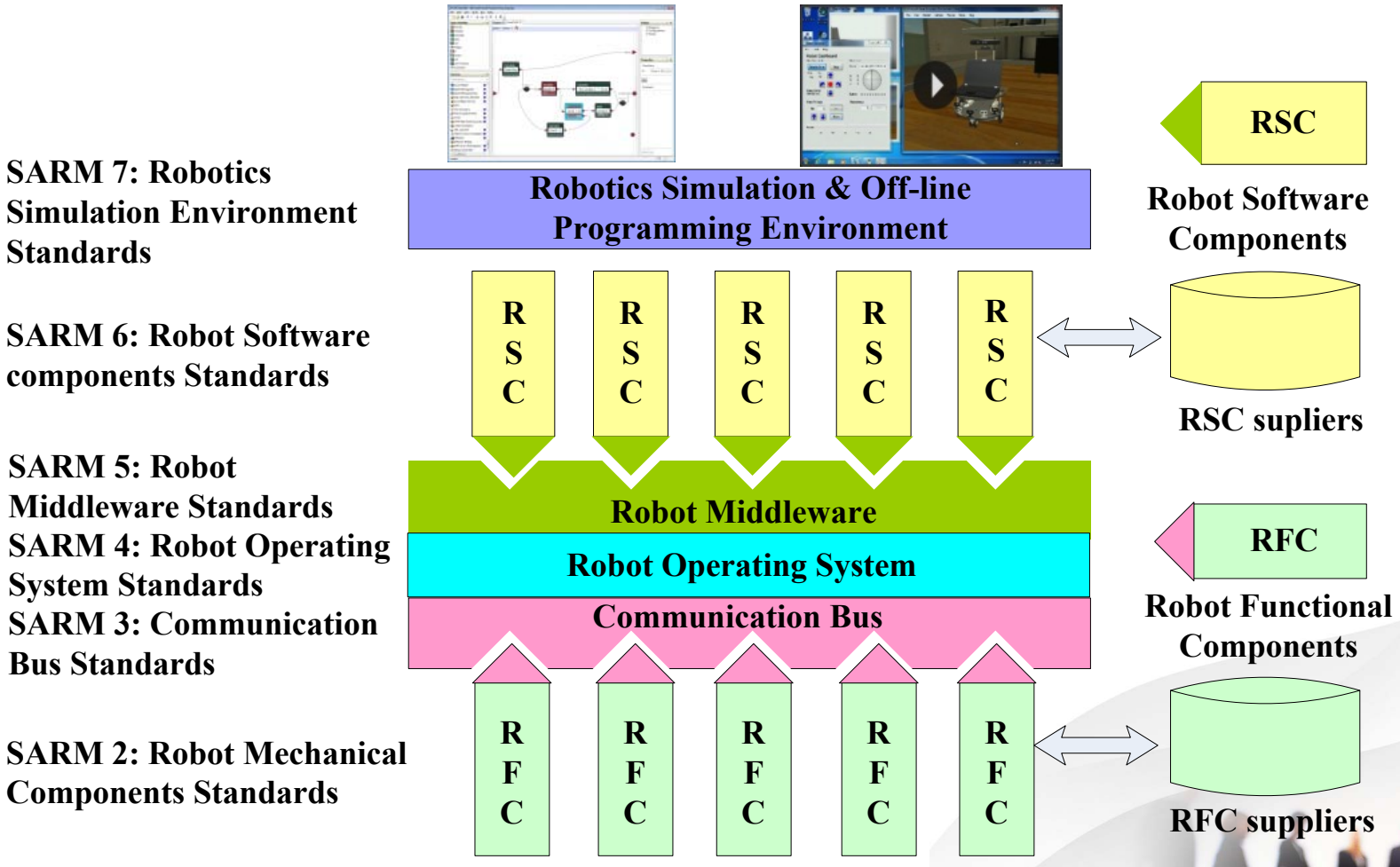

Robot Modularity Architecture

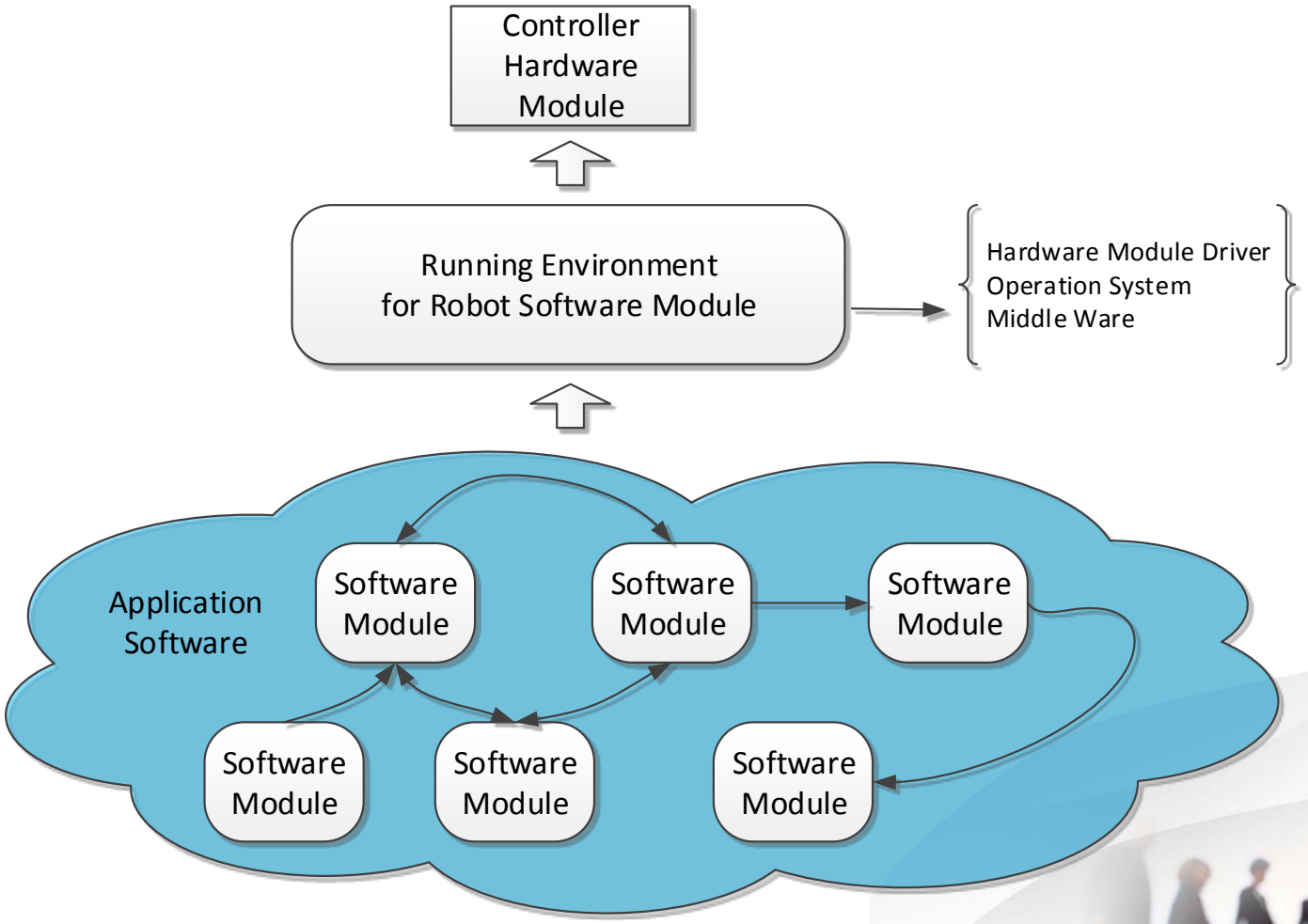

Hardware Modularity

- Interfaces for hardware module
  - Mechanical interface, power and communication bus

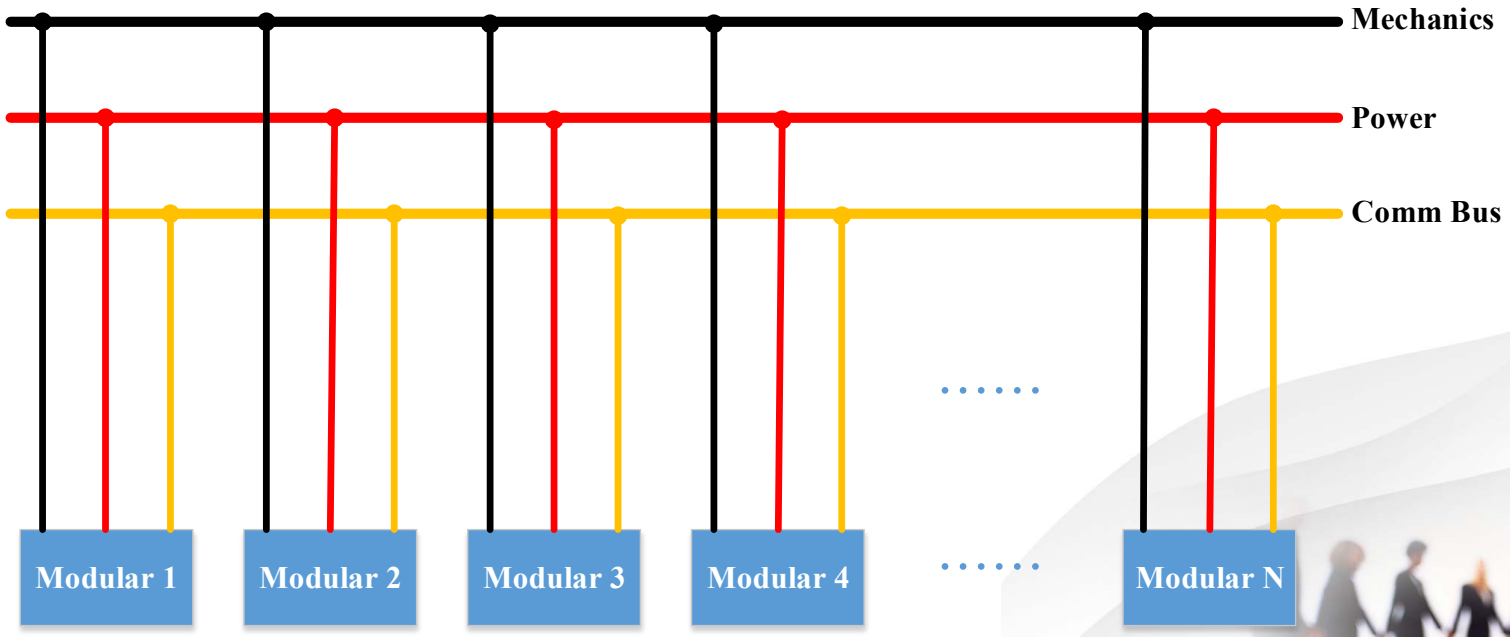

Example: Modular Joint

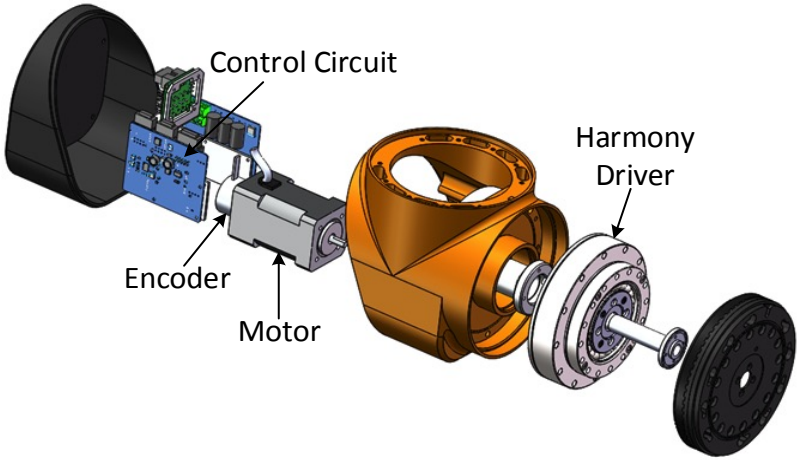

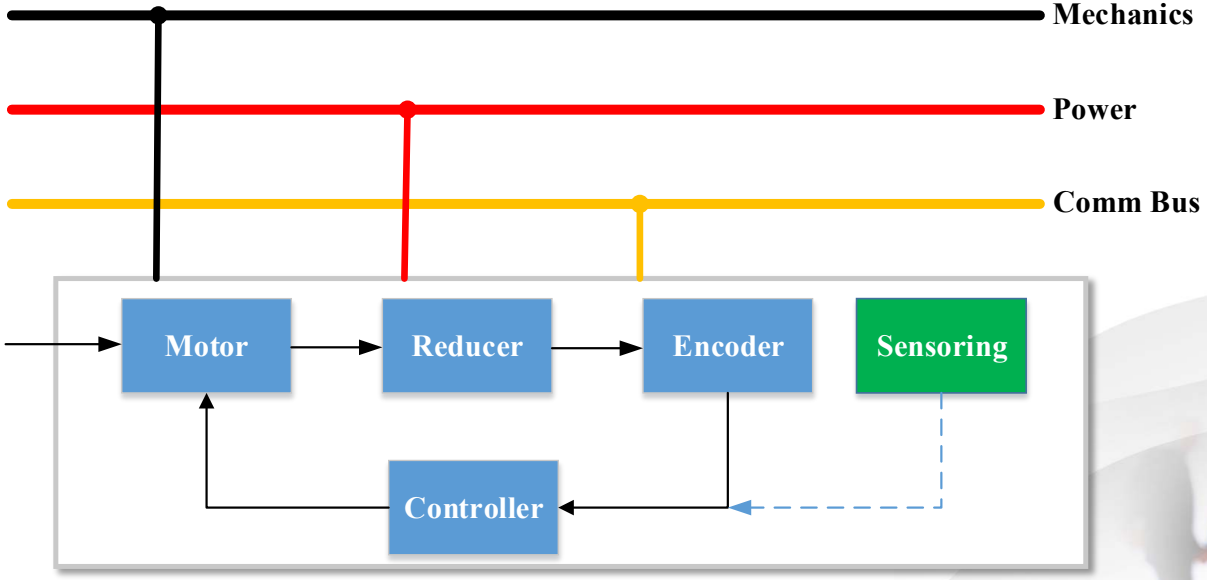

Applications of Robot Modularity

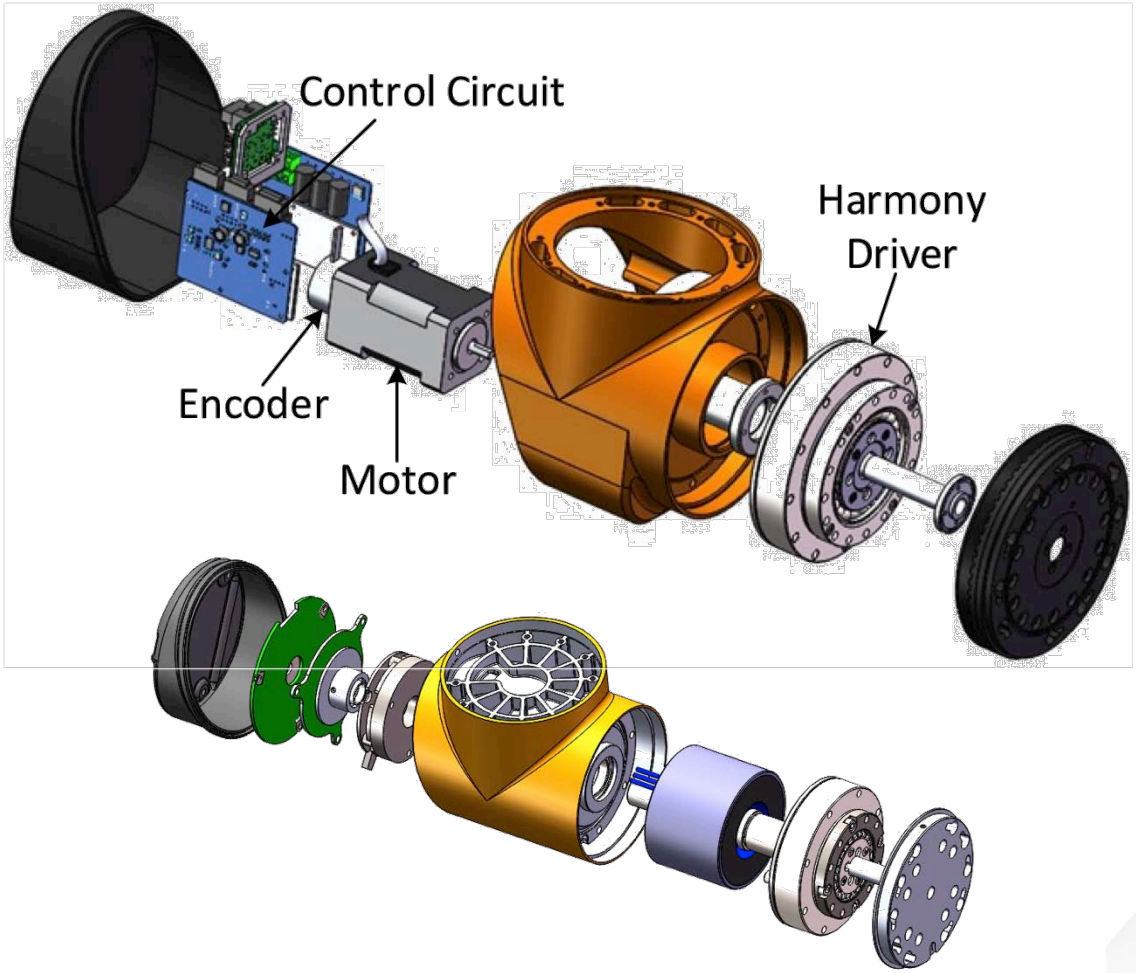

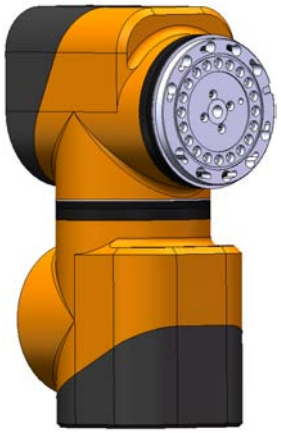

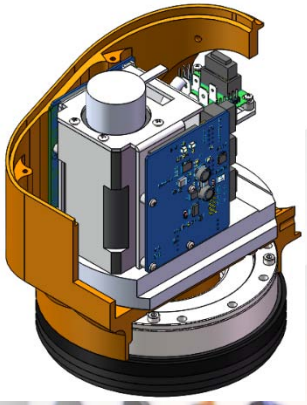

ISO/TC184/SC2 WG10

- June 2014, ISO/TC184/SC2 WG10 set up.
  - Modularity for service robots
- Develop the standards on hardware modularity

1. China♪		2. France♪	3. Korea♪	4. Spain♪	5. Switzerland♪	6. UK♪
QCao♪	HWang♪	RGelin♪	H-Spark♪	YSJoen	FJOrtiz♪ ADurrer♪	SCamero
JHan♪	RWang♪	MParent♪	SMoon♪	g♪		n♪
Alee♪	SWang♪		MSKim♪	BSSeo ♪		MOTokhi ♪
YOu♪	YWang♪		SYChi♪	JHSeo♪		BTranter♪
HWei♪	SYang♪					GSVirk♪
FXu♪	JZhao♪					

Thanks!